elan I45

Elan

Impression 45

VISIT
WEBSITE

The newest addition to the Impression Line, the Impression 45 is synonymous with great, worry free and relaxing time on the water, and is a product of handcrafted artisan woodwork, highest consumer-grade GRP composite technology and world-class ergonomic, aesthetic and naval design.

COMFORT

Leisure when cruising is guaranteed. Large volume, smart layout and equipment catering to your every need.

QUALITY

Elan Yachts are a level above the build quality of other production yachts. Unparalleled design, artisan woodwork, and high attention to detail in every aspect.

EASY TO SAIL

Optimised for short-handed or even single-handed crew, the Impression 43 is easy to control due to easily managed rigging and cruising optimized sail plan.

DECK SALOON

The raised coachroof forms a semi-deck saloon offering brighter and spacious interior, creating an ambiance of a true home away from home.

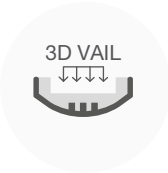

3D VAIL

Best in composite GRP construction, the hull is created with 3D vacuum assisted infusion lamination ensuring best mechanical properties of the hull.

TWIN RUDDERS

Twin rudders provide exceptional control and reduce the tendency to broach. The yacht does not stall easily, as her pitching moment is reduced. Finger tip control when heeled.

GREAT INVESTMENT

Low maintenance, exceptional durability, premium materials, reliable aftersales support and great value retention.

SAFETY

The yacht is adapted for cruising and does not challenge casual sailors. Option of a closed and covered cockpit.

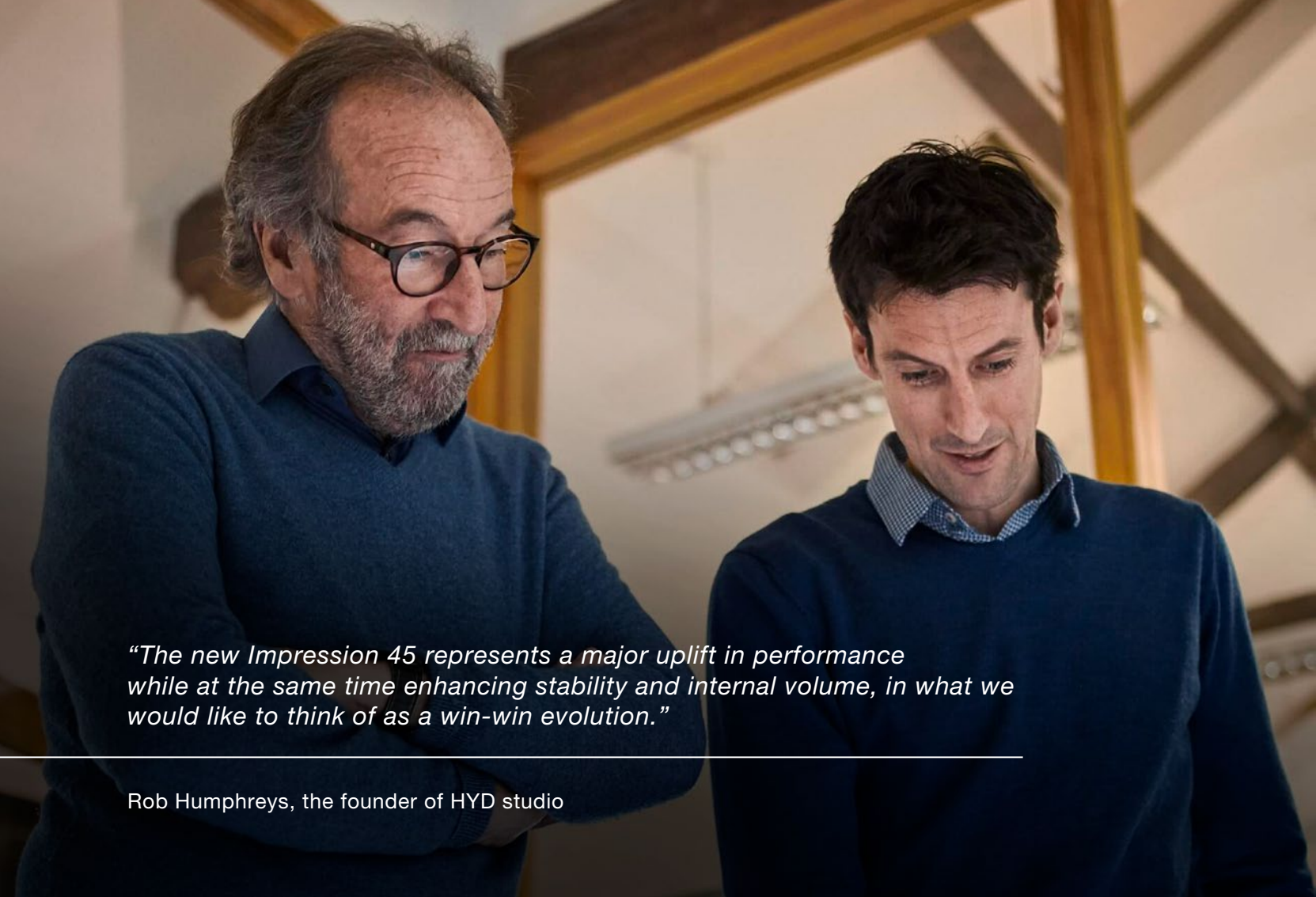

“The new Impression 45 represents a major uplift in performance while at the same time enhancing stability and internal volume, in what we would like to think of as a win-win evolution.”

Rob Humphreys, the founder of HYD studio

Naval Architecture by

Humphreys Yacht Design

It's nearly 20 years since we developed the hull form for the first of Elan's Impression line, the 434, and although it was a great foundation for a production run of more than six hundred well-loved boats, there is no doubt that we have moved on with our own experience and development. So when it came to a completely fresh start for this hub of the Impression fleet we could not ignore the wider advances we have made over these two decades.

The most obvious visual change is the twin rudder arrangement which supersedes the original Impression's single-rudder configuration. But twin rudders in our case aren't about cosmetic change - it's more about the reason for change and what sort of evolution that decision allows.

The control aspect is extended significantly, and in turn this allows greater longitudinal asymmetry in hull form, with a slightly finer entry - which promotes easier motion - fairing through to a more powerful, wider afterbody. Not only does this generate increased internal volume aft and enhanced deck and cockpit space but in particular it increases form stability, increasing the yacht's righting moment for a given displacement and keel weight, and enhancing power in heavier airs. And because performance is generally improved it means accelerated flow over the keel and rudders, further boosting efficiency and reducing leeway.

Rob Humphreys

elan 745
elan 745

Exterior

Co-developed with the legendary design studio Pininfarina, the yacht is designed for aesthetics as well as ergonomics. Ample seating for up to 10 people will make sure everyone has comfort on board. Optional modular cockpit table converts into two sunbeds and enables lounging and sunbathing in the cockpit.

Integrated into the deck are two transom boxes, which offer an extended seating area for the skipper and guests, and can hold both a grill and a refrigerator. No Impression yacht would be complete without the now-iconic pushpit seats, which are sure to be the first taken as the yacht sets sail.

The deck can be enhanced with both synthetic and real teak. Large, flush hatches and portlights are built in the coach roof in many places, letting both light and fresh air in the interior. The yacht has a self-tacking jib in standard, but can also be upgraded to a traditional genoa among other options.

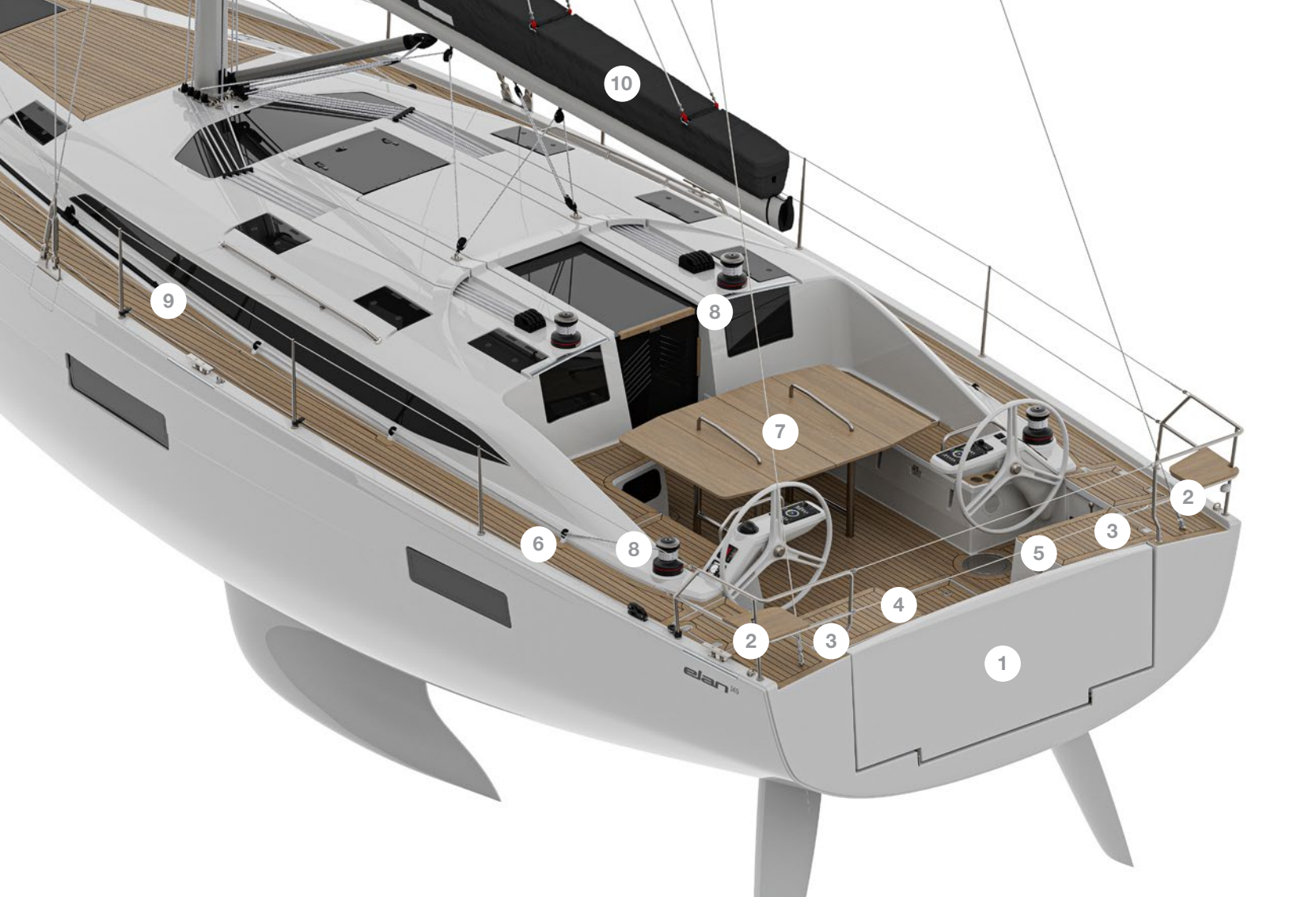
10
9
8
7
2
3
5
6
8
4
2
3
1
elan 445

Exterior

1. Bathing platform
   - small STD
   - large OPT
2. Pushpit seats STD
   - In teak OPT
3. Cockpit boxes STD
4. Grill OPT
5. Refrigerator OPT
6. Real or synthetic teak OPT
7. Cockpit table
   - Upgraded OPT
   - Upgraded with teak plywood OPT
8. 2 Harken winches
   - 4 Harken winches OPT
   - Electric winches OPT
9. Side entrance OPT
10. Main sail - traditional STD
    - Roll OPT
11. Bowsprit OPT

LA CUCIN
IN OLTRE

FACTFULNESS

Interior

Owners can choose between three or four-cabin versions. The three-cabin version includes an island bed cabin with an en-suite spacious head with a separate shower. The four-cabin version adds a cabin with bunk beds, perfect for families or groups of friends.

The interior is built with rustic oak veneer and marine-grade plywood, contrasted with modern, gray-colored storage cupboards. A solid oak wood finish is applied wherever the furniture is expected to go through most use, to increase its durability and aesthetic look. The saloon can comfortably seat the crew around a centre table, flanked by a convenient sliding bench, that moves out of the way when not needed. It can also be easily converted into a double berth. The long side-galley features a three-ring stove with an oven and a front-opening refrigerator on the convenient L-shaped cabinet. The long layout offers plenty of surface space and cupboards for storage. The stove area is protected by easy-to-clean panels and is ventilated by a hatch above.

10
11
9
12
2
3
1
5
4

Interior

1. Rustic Oak veneered furniture with solid wood finish
2. Locker STD
   - Navigation table OPT
3. Double berth OPT
4. Side galley STD
5. Gas cooker with 3 rings STD
6. Front opening fridge STD
7. Extra space for top loading fridge OPT
8. Microwave OPT
9. TV OPT
10. Grabrails STD
11. Blinds and hatches STD
12. Reading light with USB charger OPT

Techical specifications

OVERALL LENGTH	13.60 m | 44’ 7”
HULL LENGTH	12.82 m | 42’
LENGTH AT WATERLINE	12.20 m | 40’
BEAM	4.25 m | 13’ 11”
DRAFT (standard) DRAFT (option)	1.95 m | 6’ 5” 1.70 m | 5’ 7”
AIR DRAFT (including antenna)	19.90 m | 65’ 3”
STANDARD DISPLACEMENT (mLCC)	11,100 kg | 24,471 lbs
BALLAST BALLAST (option)	3,541 kg | 7,807 lbs 3,686 kg | 8,126 lbs
ENGINE (standard) ENGINE (option) OCEANVOLT (option)	Yanmar 4JH45 / 45 HP Yanmar 4JH57 / 57 HP Yanmar 4JH80 / 80 HP Oceanvolt electric - TBQ
FUEL CAPACITY	287 L | 75.8 US gal
WATER CAPACITY (standard) WATER CAPACITY (option)	270 L | 71.3 US gal 470 L | 124 US gal
MAINSAIL (standard) MAINSAIL FURLING (option)	46.68 m^2 | 502.5 sq ft 42.10 m^2 | 453.2 sq ft
SELF TACKING JIB (standard)	34.1 m^2 | 367 sq ft
GENOA (option)	41.30 m^2 | 444.5 sq ft
GENNAKER	118 m^2 | 1,27 sq ft
I	16.30 m | 53’ 6”
J	4.815 m | 15’ 9”
P	15.20 m | 49’ 10”
E	5.43 m | 17’ 10”
DESIGN	Humphreys Yachts Design, Pininarina & Elan Design Team

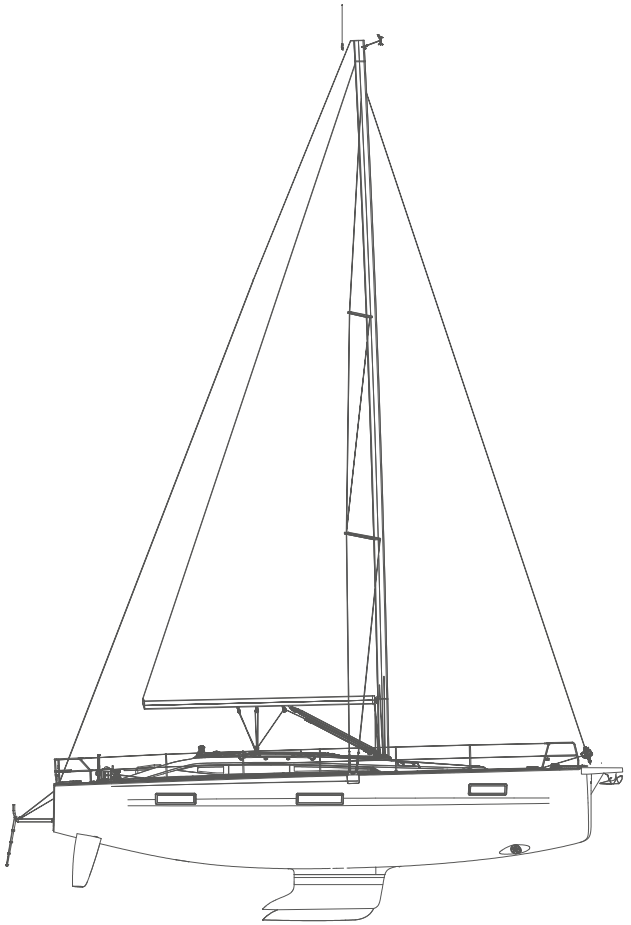

Layouts

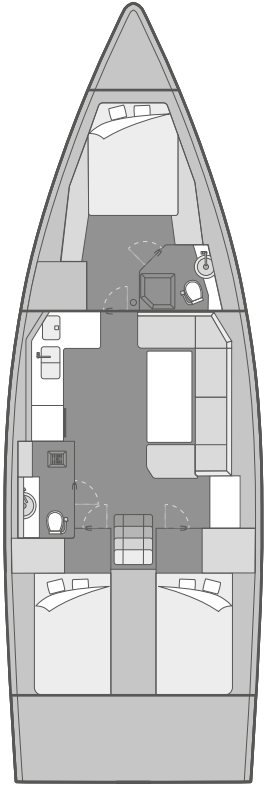

Option 1
3 cabins, 2 heads

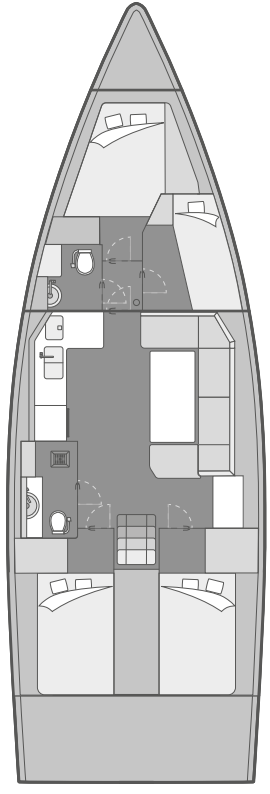

Option 2
4 cabins, 2 heads

uncompromising **since 1949**

Elan, d.o.o. - Marine Division
Begunje 1, 4275 Begunje na Gorenjskem, Slovenia
+386 4 53 51 109 | sail@elan.si
www.elan-yachts.com

September 2024

All specifications are subject to change without notice.